ISSUE DATE: 03/07/2014

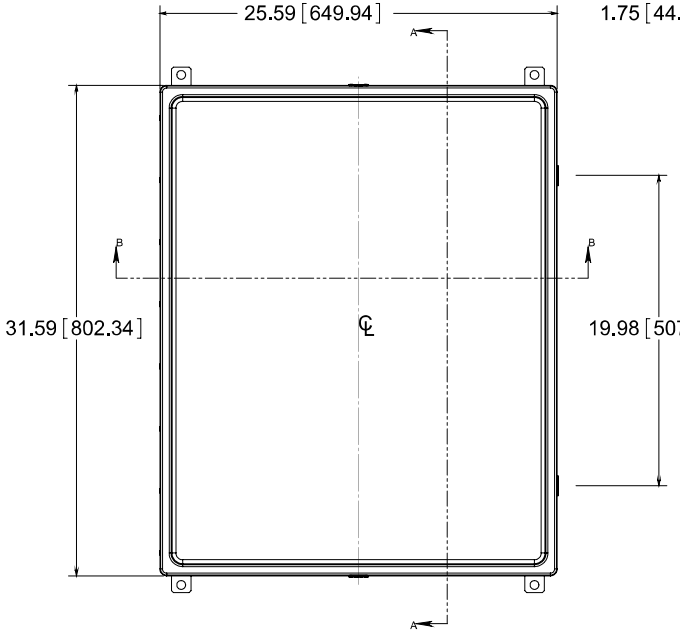

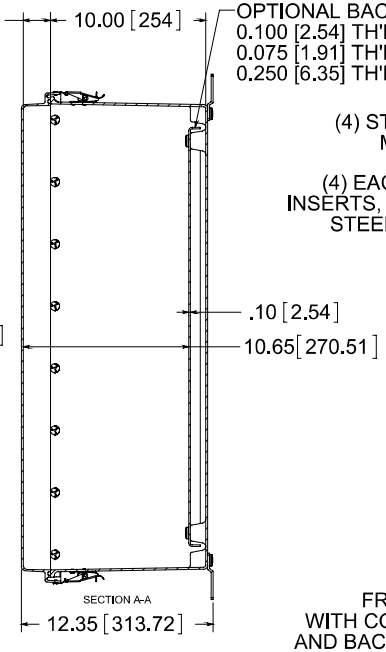

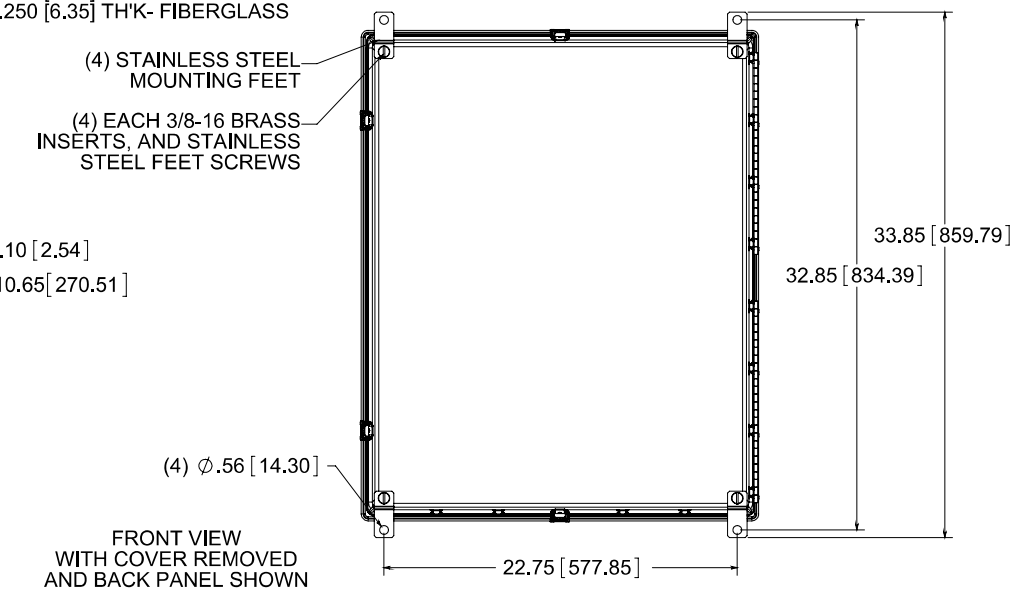

FRONT VIEW
WITH COVER REMOVED
AND BACK PANEL SHOWN

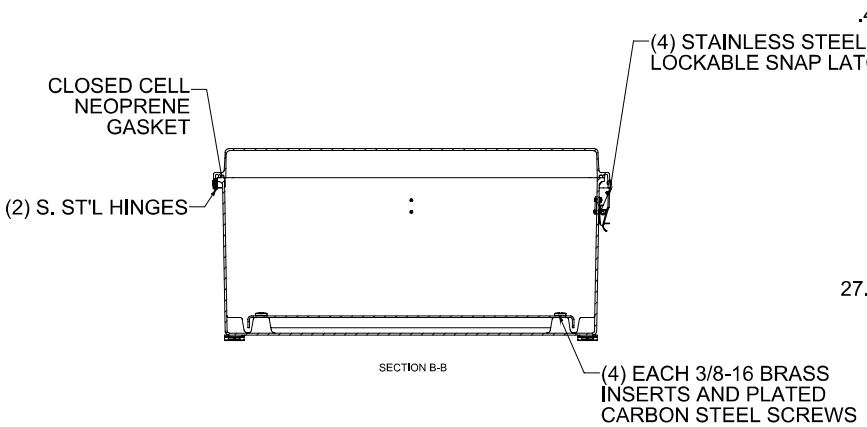

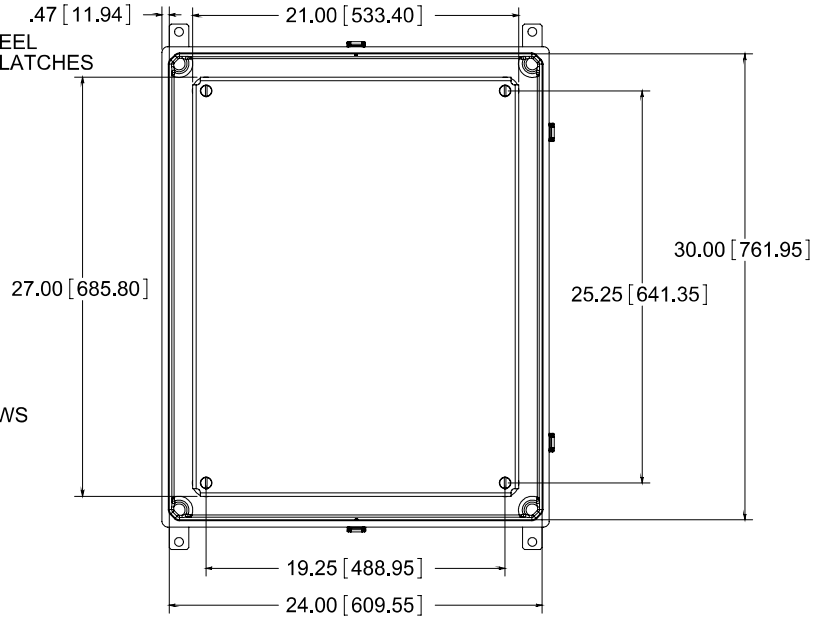

MATERIAL:
BOX- COMPRESSION MOLDED FIBERGLASS REINFORCED POLYESTER
COVER- COMPRESSION MOLDED FIBERGLASS REINFORCED POLYESTER
WINDOW- POLYCARBONATE

CONFIDENTIAL
THE MATERIAL IS OWNED BY THE ALLIED MOULDED PRODUCTS COMPANY, IS DISCLOSED IN CONFIDENCE, AND IS NOT TO BE REPRODUCED OR DEMONSTRATED WITHOUT PRIOR WRITTEN PERMISSION FROM ALLIED MOULDED PRODUCTS.

ALLIED MOULDED PRODUCTS
BRYAN, OHIO
The Original Fiber Glass Outlet Box

Description: AM30240RL

Part No. AM30240RL